rosseto
SERVING SOLUTIONS

# EZ-PRO™ 1W/3W/5W (EZ501-N/EZP2906-N/EZP2890-N)

## SETTING UP YOUR PRODUCT

1. Carefully remove all parts from packaging and poly bags.

- Depending on your model, you will have 1/3/5 NSF-certified EZ-PRO™ containers each with:
  a. Lid
  - **3 interchangeable portion wheels:**
    b. PRO 6-Wing Silicon 1 oz. Portion Wheel
    c. PRO-6SM 1 tbsp.
    d. EZP007 1 tsp. Scoop-It™ Wheel with Funnel

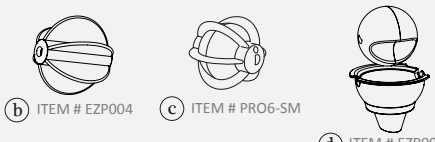


  - **2 interchangeable nozzles:**
    e. Regular Nozzle
    f. Narrow Nozzle

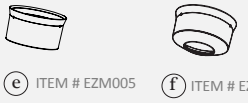


NOTE:
Please remove the clear plastic nozzle when using EZP007 or any of the Scoop-It™ Portion Wheels.

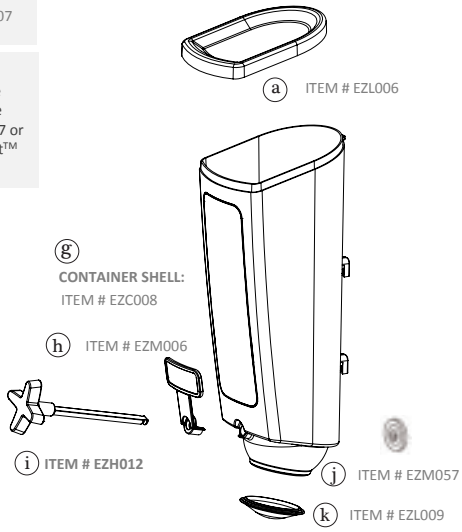


  g. Container
  h. Label Holder
  i. Handle
  j. Handle Clip
  k. PRO Fresh Lid
- 1/3/5 easy-to-install back snap system (optional accessory)
- 1 EZ-PRO™ metal bracket

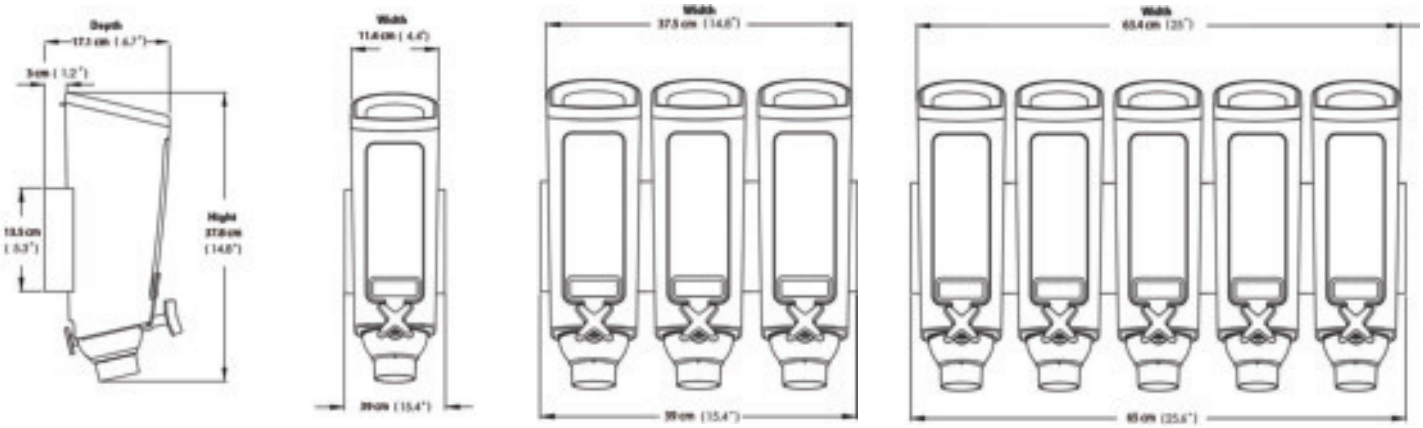

2. Make sure you have all parts listed above before discarding packaging.
3. Consult your contractor about what mounting hardware (not included) to use, depending on the type of wall you have.
4. Mount EZ-PRO™ metal bracket where desired, making sure it is affixed securely to the wall.
5. Check the portion wheels installed and make sure you use the right fit for each product you are dispensing.
   NOTE: If you need to change any portion wheels, follow steps 2 thru 5 on the disassembly instructions on Page 2.
6. Fill an EZ-PRO™ container with desired product and seal with the lid.


NEED ASSISTANCE?

Please contact our customer support at (847)763-1215 and we'll be happy to assist with any assembly questions, comments or concerns.

**ROSSETO®** 3600 W. Pratt Avenue. Lincolnwood, IL 60712
Visit our website at: **www.rosseto.com**

7. On the back of each container are 2 hooks that fit snugly onto the allotted notches on the stand. Install a container by securing both hooks on the upper and lower notches. Make sure it locks into place.
8. If desired, place an identifying label on the label holder.
9. Repeat steps 5 thru 7 for the remaining containers.
10. Dispense as you please!
11. When unit is not in use, fasten the PRO Fresh lid onto the nozzle.

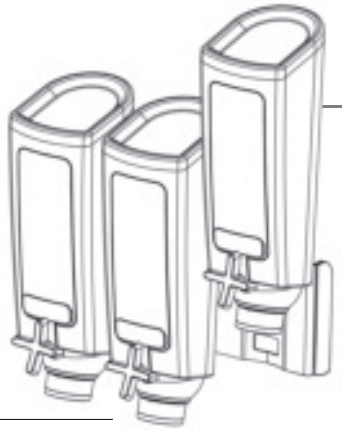

2 hooks on the back of the EZ-PRO™ container latch on to the upper and lower notches on the mounted bracket.

NOTE: Included with each container unit is an optional locking system that you can easily install with a small Phillips head screwdriver. (ITEM # EZM048)

**CARE INSTRUCTIONS:**

1. To maintain the quality of your EZ-PRO™ dispenser, wash all parts daily in warm soapy water. Use a non-abrasive sponge.
2. DO NOT put any part of the unit through any dishwasher or dryer machines.
3. When disassembling the container, handle all parts gently. Please refrain from using too much force.
4. Reassemble the unit only after all parts are completely dry.

**HOW TO DISASSEMBLE:**

1. Remove the container from the stand by holding it securely and lifting directly upward, clearing the hooks from the notches on the bracket.
2. Remove lid from top of container. Make sure there is no remaining product inside that can spill over.
3. Remove handle clip at the back of the container.
4. Gently pull the handle from the front of the container. Set aside both handle and label holder.
5. Reach into container and remove portion wheel by gently pulling upwards or turning container upside down. Do the same to remove the nozzle.

**HOW TO ASSEMBLE:**

1. Place nozzle into container, followed by the portion wheel.
2. Adjust the portion wheel inside the container, so that its holes align with the container's holes (both front and back).
3. Position the label holder so that it matches the hole on the front of the container.
4. Insert handle through the label holder and front hole. Push the shaft through the portion wheel, all the way to the back of the container.
5. Install handle clip to the back end of the shaft. Make sure it locks snugly into place.
6. Fill container with desired dry product and place lid securely on the container.
7. Follow steps 7 and 8 on the setup instructions.

## Need a different-sized portion wheel? We have 3 more options for you to choose from!

Other portion wheels available:

- EZP008 – 2 teaspoons
- EZP010 – 3 teaspoons
- EZP011 – 4.5 teaspoons

## The Rosseto interchangeable portion wheels deliver just the right amount of product every time. Test each wheel with your dry foods to determine which works best for you!

NEED ASSISTANCE?

Please contact our customer support at (847)763-1215 and we'll be happy to assist with any assembly questions, comments or concerns.

**ROSSETO®** 3600 W. Pratt Avenue. Lincolnwood, IL 60712
Visit our website at: **www.rosseto.com**

2014 February 12 IS003 - V2